WHALE SPA®

# OWNER MANUAL

PLEASE SAVE THIS MANUAL FOR FUTURE REFERENCE

## PURE II

C UL US
Listed

Assembled &
Tested in USA

© 2025 Whale Spa. All rights reserved. Design and Specifications are subject to change without notice.

# Table of Contents

Owner Manual

Limited Warranty ..... 4

Safety and Precautions ..... 5-6

Installation .....7

Pedicure Components ..... 8

Clearances ..... 9

# Whale Spa, Inc - Limited Conditional * Warranty

Whale Spa conditionally warrants your pedicure spa in accordance with the terms and conditions set forth below for a period of two (2) years commencing on the original date of shipment of the Pedicure Spa to you. The warranty only applies to the Pedicure Spa's original end-user owner or customer. This Conditional Warranty is non-transferable and replaces any warranties previously published by Whale Spa. If examination of the Pedicure Spa by Whale Spa during the applicable warranty period shows it to have a defect in material or workmanship, Whale Spa will, at its option, repair or replace the defective component or part thereof. Further, Whale Spa may, at its discretion, replace a defective component or part with a refurbished component or part. Whale Spa shall bear all charges incurred for the shipment of replacement components or parts. The forgoing limited warranty does not apply:

• Normal wear and tear is not covered under the warranty. Additionally, components subject to wear and tear, such as magnet jet heads, are likewise excluded from warranty coverage.

• To the Pedicure Spa, or any components or parts thereof, if subjected to misuse or neglect or if accidentally or intentionally damaged.

• To the Pedicure Spa, or any components or part, if altered or modified in any way.

• To any expenses incurred by the Customer or any third party, including labor or material, during investigation, removal or reinstallation of the Pedicure Spa or any defective components or parts.

• To any damage to or impairment of the Pedicure Spa, or any components or parts thereof, caused by any casualty, including without limitation, accident, fire, wind, floods, acts of nature or attempted theft.

• To any workmanship of a fabricator (other than Whale Spa) or installer of the Pedicure Spa.

• To staining, fading, or discoloration of any portion of the Pedicure Spa including upholstered seat, armrests or footrests.

• To malfunctions or damage caused by improper installation of the Pedicure Spa, including, but not limited to, failure to meet local, state, or local plumbing, electrical and building codes.

• To freight damage or damage incurred to the Pedicure Spa while in possession of any party other than Whale Spa.

This forgoing conditional limited warranty is also conditional upon:

• The Pedicure Spa being installed by a licensed professional in accordance with Whale Spa's installation instructions.

• The proper use of cleaning and sanitizing solutions in accordance with the instruction labels provided by Whale Spa. Repeated use of concentrated chlorine or other chemicals will void this limited warranty.

• Determination by Whale Spa, in its reasonable discretion, that there exists a defect in material or workmanship. Repair or replacement of any part or component under this Limited Warranty, or furnishing a replacement pedicure spa, shall not extend the duration of the warranty with respect to such repaired or replaced part beyond the stated warranty period. When a part or component is replaced, it will be under warranty for 90 days, or for the remaining life of original warranty, whichever period is greater.

For troubleshooting visit: whalespainc.com/troubleshoot
Should your Pedicure Spa require service, please contact:
**Whale Spa – Technical Support**
1-888-650-7888
email: info@whalespa.com

# SAFETY & PRECAUTION

The Whale Spa pedicure chairs (herein referred to as pedicure spa) are innovative pedicure spas that have been designed to serve you dependably for many years. Please take time to thoroughly read this entire manual before installation and use. If you have any problems or have questions regarding your pedicure spa, please contact Whale Spa's Technical Support Department at info@whalespa.net or call 1-888-650-7888, Monday through Friday 10 AM to 6 PM PST.

Whale Spa requires that you contact a local, licensed plumber and licensed electrician to install your new pedicure spa.
Installation must be in compliance with all your local and state building codes. Your pedicure spa cannot operate efficiently or safely unless it is provided with adequate electrical power, sufficient water pressure, proper water temperature, and required drainage capabilities. Contact your local building inspector for information and local code compliance procedures that need to be followed when having your pedicure spa installed. Subsequent inspections and approvals that may be required are the responsibility of the purchaser. (See limited warranty regarding incidental or consequential exclusions)

1) WARNING: RISK OF ELECTRIC SHOCK: do not permit electric appliances (such as a hair dryer, lamp, telephone, radio, or television) within 1.5M of this pedicure spa.
2) CAUTION: Test the ground fault circuit interrupter protecting this appliance periodically in accordance with the manufacturer's instructions.
3) Temperatures sufficiently high to cause burns may occur regardless of the control setting.
a. Do not use on…
- Infants
- Sleeping or unconscious persons.

b. Do not use on…
- Sensitive skin
- Person with poor blood circulation.

**Note: Check the skin in contact with the heated area of the appliance frequently to reduce the risk of blistering.**
4) Excessive water temperature is dangerous and should be checked before use. Maximum operating water temperature should not exceed 105 F (41 C) and the maximum supply water temperature should not exceed 150 F (65 C).
5) The spa could have a heated surface in the seat back cushion. Persons sensitive to heat must be careful when using the spa.
6) Always enter and exit the pedicure spa slowly and carefully.
7) Close side arm rests before operating the chair seat movement.
8) Never bring or operate any electrical devices into or near the pedicure spa.
9) This pedicure spa has a weight capacity of 450 pounds.
10) Use only while seated.
11) Connect this appliance to a properly grounded outlet only. See Grounding Instructions within the install manual.

**Note: Always verify maximum temperatures with your local & state codes.**

**Warning**

Individuals whose feet or legs are inflamed or have open wounds should not be allowed to use the pedicure spa at any time. Nail technicians should advise clients to consult their physician before using the pedicure spa if there is any sign of fungal infection, swelling, fracture, or persistent pain. In some cases diabetics may experience improved circulation in their feet, but should first consult their physician prior to receiving a pedicure. If the client experiences any pain or discomfort, immediately discontinue the use of the pedicure spa. Your client's massage and pedicure spa experience should be pleasant and comfortable.

SAFETY & PRECAUTION

# Important Installation and Utility Information

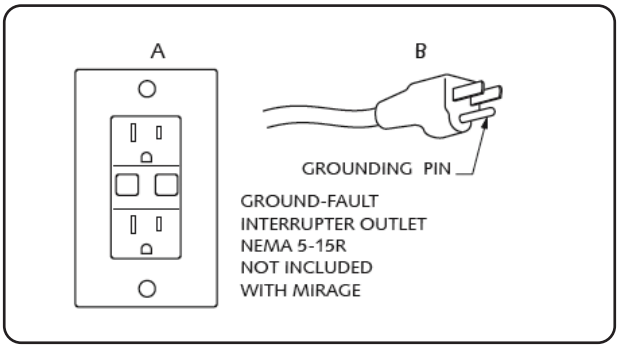


**COMPLIANCE WITH LOCAL CODES OR INSPECTIONS IS THE RESPONSIBILITY OF THE PURCHASER AND/OR INSTALLER**

**Electrical Service:**
110V: A 110V, 60 Hz, 15 Amp GFCI protected grounded circuit must be used to supply power to the pedicure spa. (220V if ordered in 220V configuration)

**Water Supply:**
All plumbing connections must conform to local codes. Normal water pressure of 30 to 80 PSI is required to correctly fill the basin to the proper level. The hot water supply temperature must not exceed 150 F (65 C). Adjust your hot water heater accordingly. Carefully connect the incoming water supply lines to the appropriate fittings located on the back of the pedicure spa. Shut-off valves are recommended.

**Basin capacity:**
4.5 US gallons of water per pedicure service.

**Backflow Protection Devices for Faucets with Side Spray:**

Check valves comply with ANSI/ASME A112.18.3M, A112.18.1M, and CSA B125 ANSI/ASME A112.18.3M (Performance Requirements for Backflow Protection Devices and Systems in Plumbing Fixture Fittings) is applicable to plumbing fixture fittings with outlets not protected by an air gap.

Included in the possible range of applications are fittings with hose connected outlets, fittings with pullout spout, hand held showers, shampoo fittings and deck-mounted fittings. ASME A112.18.3M is now referenced in ASME A112.18.1M (Plumbing Fixture Fittings) and CSA B125.

Check valves are listed to both standards with the Canadian Standards Association, IAPMO and UL. ANSI - American National Standards Institute
ASME - American Society of Mechanical Engineers CSA - Canadian Standards Association IAPMO - International Association of Plumbing and Mechanical Officials UL - Underwriters Laboratory

The pedicure spa drain must meet local plumbing codes. Check valve for drain (not provided) must be installed by a licensed plumber.

# INSTALLATION

## Install Seat to The Base

1. Remove **pedicure spa base** from its box and place at the location where it will be installed.

2. Remove the **massage backrest** from its box and place aside. Remove the **seat base/ armrest frame** from the same box and place on top of **pedicure spa base**.

3. Align four screw holes and insert screws to affix **seat base/armrest frame** to **pedicure spa base**.

4. Lay **massage backrest** flat onto **seat base/armrest frame**. Lift **massage backrest** upward and align the pivots onto their housing. Pivots are located at the lower left and right sides of chair.

5. Gently recline **massage backrest** until it clicks into place. Attach leather seat cushion, leather seat back, and leather pillow. (Note: **Green connector wire** under seat cushion is for seat vibration function. Seat vibration function is no longer offered.)

6. Connect **Power Seat Controller** connector (located behind right rear arm rest) to respective connector at rear of **pedicure spa base**. (Note: Power Seat Controller is optional, thus may not be equipped on your unit.)

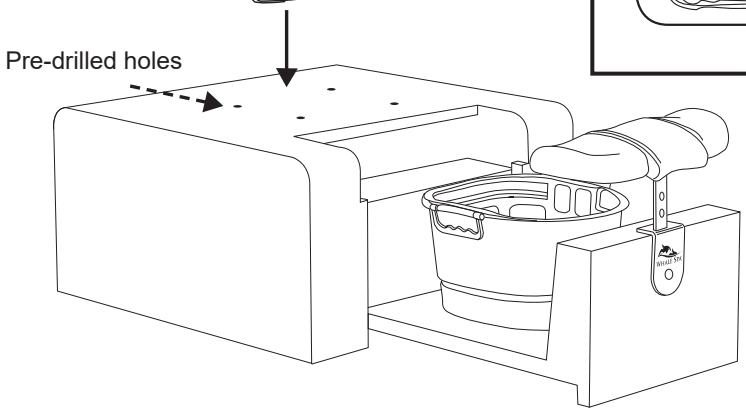


## Leather and Foam Pad

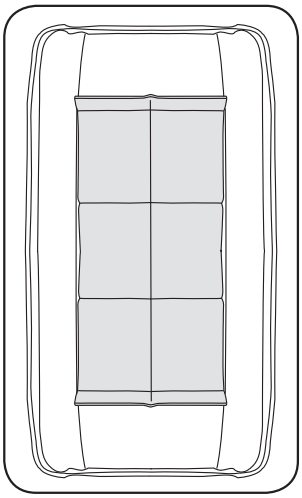

The foam pad attaches to the backside of the backrest leather and protects the leather from excessive wear.

**Leather Care:** Clean with mild soap and water. For stubborn stains, spot clean with 99% alcohol.

**Check the foam pad every 6 months and replace if flattened**

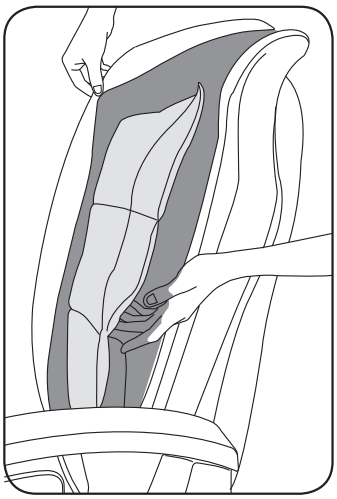

# PEDICURE COMPONENTS

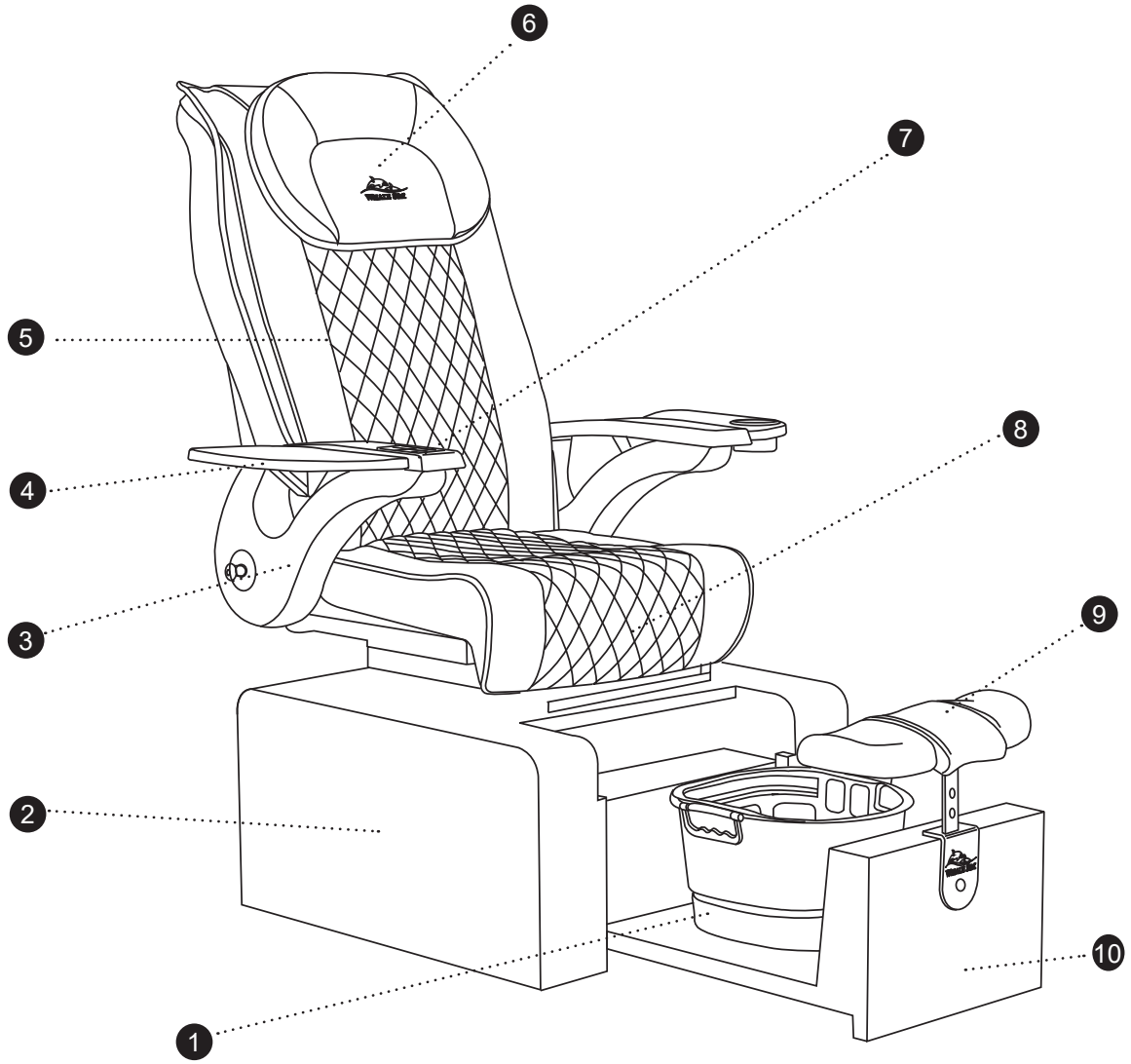


1. Portable Bowl
2. Wood Base
3. Armrest
4. Flip-out Tray with Cup Holder
5. Back Rest with Massager
6. Headrest Pillow
7. Remote Controller
8. Seat Cushion
9. Adjustable Footrest
10. Sliding Bowl Holder
11. Power Cable Pass Through Port
12. USB and A/C Outlet

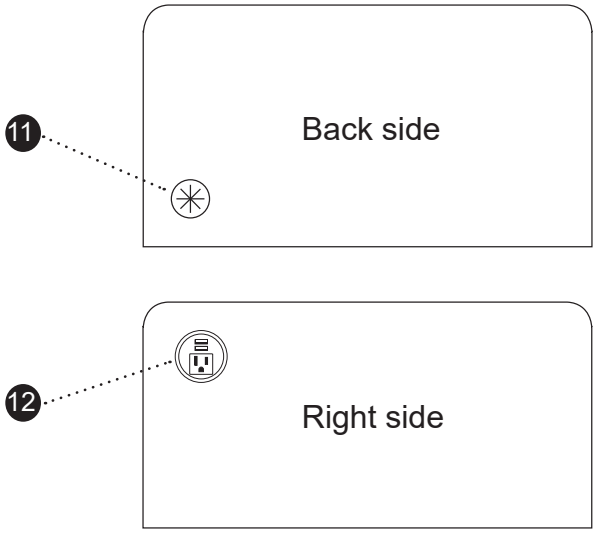

# CLEARANCE

**DIMENSIONS**

Pure 29” L x 30” W x 53” H (Trays Down/Closed Bowl)

Pure 56” L x 43” W x 53” H (Trays Up/Open Bowl)

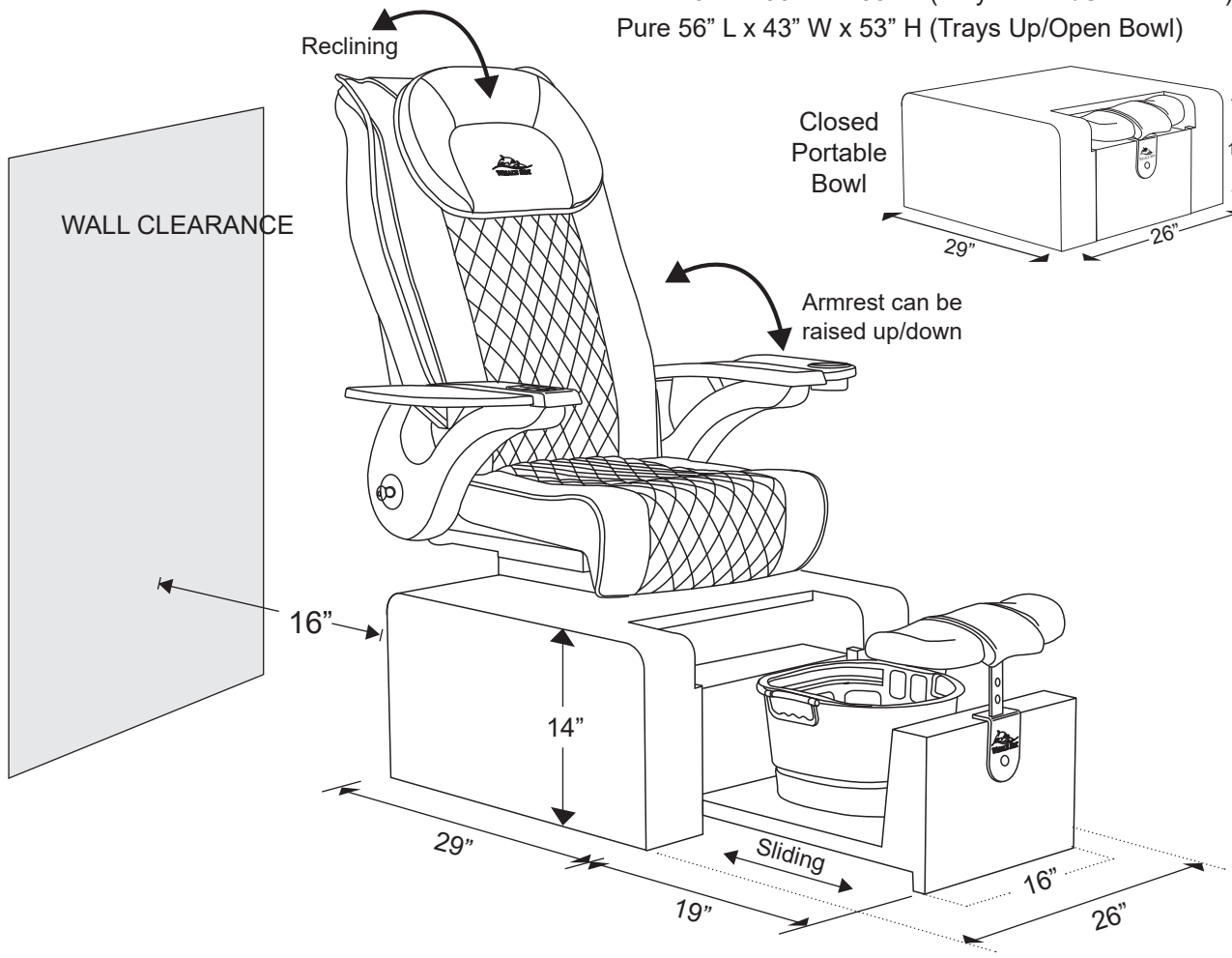


**TYPICAL FOOT-SPAS**

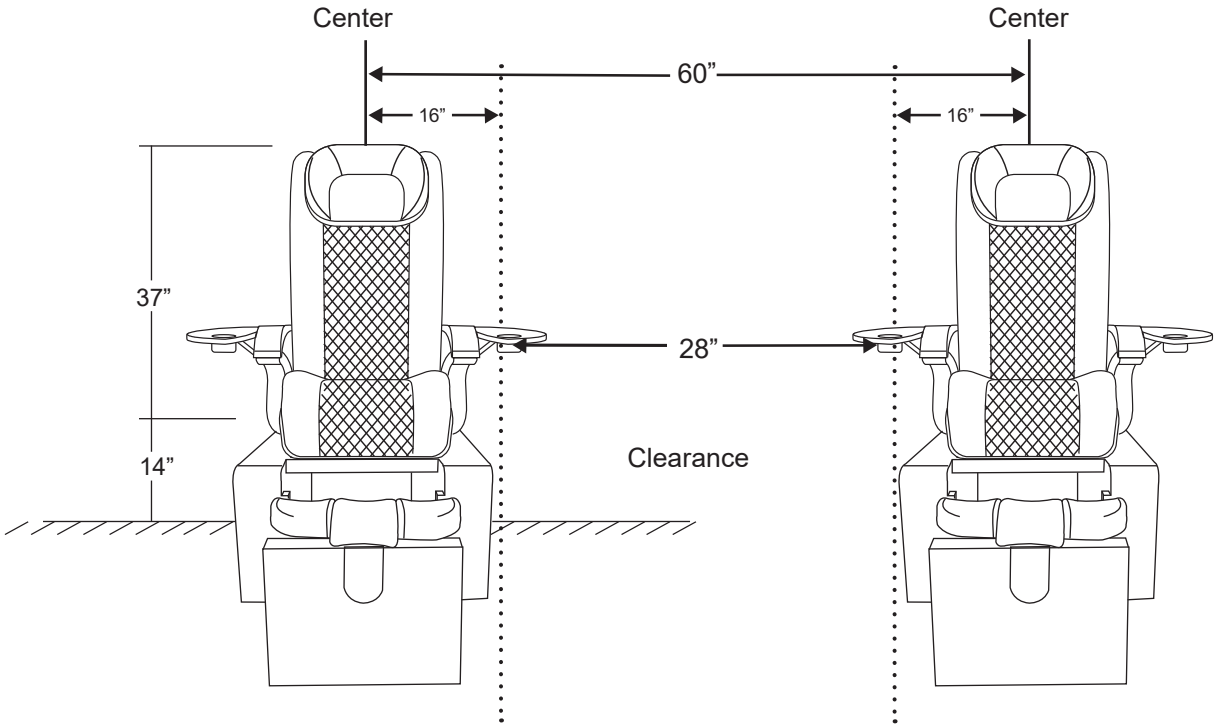

# UL PRODUCT CATEGORY

## Plumbing Accessories

See General Information for Plumbing Accessories

**WHALE SPA, INC.** E329848
14282 BROOKHURST ST, SUITE 1
GARDEN GROVE, CA 92843 USA

**Pedicure spas, "Apex Junior Series"**, Model(s) SPA I, SPA II

**Pedicure spas, "Apex Series"**, Model(s) 55i, 60i

**Pedicure spas, "Whale Series"**, Model(s) Allure, Deluxe #1, Era #5, Harmony #7, Serenity, Tawa, WS 400, WS 500, WS 600, WS 65i Lyptus, WS 700, WS 75i Alden, WS 800, WS 85i, WS 900

Last Updated on 2019-08-22

The appearance of a company's name or product in this database does not in itself assure that products so identified have been manufactured under UL's Follow-Up Service. Only those products bearing the UL Mark should be considered to be Certified and covered under UL's Follow-Up Service. Always look for the Mark on the product.

UL permits the reproduction of the material contained in the Online Certification Directory subject to the following conditions: 1. The Guide Information, Assemblies, Constructions, Designs, Systems, and/or Certifications (files) must be presented in their entirety and in a non-misleading manner, without any manipulation of the data (or drawings). 2. The statement "Reprinted from the Online Certifications Directory with permission from UL" must appear adjacent to the extracted material. In addition, the reprinted material must include a copyright notice in the following format: "© 2019 UL LLC".

UL and the UL logo are trademarks of UL LLC © 2019 All Rights Reserved.

WHALE SPA®

www.WhaleSpa.com

© 2025 Whale Spa. All rights reserved. Design and Specifications are subject to change without notice.